H2020-LCE-2016-2017

EUROPEAN COMMISSION

Innovation and Networks Executive Agency

Grant agreement no. 774392

E-LOBSTER

Electric losses balancing through integrated storage and power electronics towards increased synergy between railways and electricity distribution networks

Deliverable D1.3
Report on integrating storage and LCTs at the SOP

Document Details

Due date	31-01-2019
Actual delivery date	31-01-2019
Lead Contractor	UOB
Version	rev0
Prepared by	UOB
Reviewed by	RINA-C
Dissemination Level	Public

Project Contractual Details

Project Title	Electric losses balancing through integrated storage and power electronics towards increased synergy between railways and electricity distribution networks
Project Acronym	E-LOBSTER
Grant Agreement No.	774392
Project Start Date	01-06-2018
Project End Date	30-11-2021
Duration	42 months

The project has received funding from the European Union's Horizon 2020 research and innovation programme under Grant Agreement No 774392.

Table of Contents

Terms and abbreviations

The table below lists (alphabetically) the terms and abbreviations used in this document.

Abbreviation	Description
LCTs	Low-carbon technologies
SOP	Soft Open Point
TPSS	Traction Power Substation
DSO	Distribution System Operator

1 Introduction

The main objective of the E-LOBSTER project is to develop and demonstrate up to TRL 6 in relevant environment (a real underground railway in Madrid connected to a local power distribution network with a high penetration of RES) an innovative, economically viable and easily replicable Electric Transport-Grid Inter-Connection System that properly managed will be able to establish mutual synergies between power distribution networks, electrified urban transport networks (metro, trams, light railways etc.) and charging stations for electric vehicles.

In particular, E-LOBSTER will demonstrate tools and technologies, software and hardware to monitor in real time the source of losses of both the networks (Transport and distribution networks (DN)) prioritising techniques for their minimisation via a coordinated control of the power supply for electrified transport and recharge stations for electric cars and towards the maximisation of the local consumption of Renewable Energy Sources (RES) production thanks to the use of Electrical Energy Storage (EES) and advanced power electronics devices.

A Soft Open Point (SOP) is a power electronic device installed in place of a normally-open point in electrical power distribution networks. A SOP can provide active power flow control, reactive power compensation and voltage regulation under normal network operating conditions, as well as fast fault isolation and supply restoration under abnormal conditions. A new smart SOP (sSOP) device interconnecting railway electrification and power distribution networks will be developed in the framework of E-LOBSTER.

This report reviews the low carbon technologies including the renewable energy sources and energy storage devices and introduces the possible connection schematics with LCT integration for both AC and DC railways.

This report also assesses mutual benefit synergies between the two grids storage, and analyses how to optimize storage size, installation guidelines and storage management.

2 Overview of low carbon technologies

This chapter reviews the main low carbon technologies. The application of the wind, solar energy and energy storage in rail sector is introduced.

2.1 Renewable energy sources

2.1.1 Wind energy

Wind energy is the kinetic energy of air in motion. The air flow provides mechanical power by wind turbines to turn electric generations and finally outputs electricity. The wind power is determined by the size of the rotor blades, the wind velocity and the air density. The theoretical wind power is the flow rate of kinetic energy per second by a wind turbine and is given by the equation:

$$P_{wind} = \frac{1}{2}\rho\pi R^2 V_{wind}^3 \times \eta$$

where, P_{wind} is the wind power, ρ is the air density in kg/m^3, R is the rotor radius or blade length in m, and $V_{wind}$is the wind speed in m/s. η is the efficiency, which is converted from wind movement to wind turbines mechanical energy, typically 0.35 to 0.45, (35 – 45%).

Wind power generators operate from tiny plants for battery charging at isolated residences, to near gigawatt sizes at offshore and onshore wind farms that supply electricity to national electrical grids. The largest onshore wind farm is in China, called Gansu Wind Farm; it had a capacity of over 6,000 MW of power in 2012, and it will be increased to 20,000 MW by 2020. The 630 MW London Array is the largest offshore wind farm, built in 2013. Many large wind farms are under construction, such as the 700 MW Sinus Holding Wind Farm in Romania and the 420 MW Macharthur Wind Farm in Australia.

One idea for railways is that wind power may be harnessed from moving trains. However, if we try to use wind power from fast moving trains, it will also increase the air resistance (drag) of the train, so the train would need more energy to overcome drag. However, it could be used to assist a braking train, because extra drag will increase deceleration. The idea should be further researched.

Dutch Railways has partnered with energy company Eneco to use its wind turbines to generate the energy needed to power all of its electric trains [1]. The 100 per cent wind energy-powered trains transport 600,000 passengers and three strokes of an Eneco wind turbine drives a railway train one kilometre. In this example of the Dutch railways, Even though the wind turbines generates all the energy required by the railways, there is no apparently direct connection between the electricity generated by wind turbines and the DC voltage input to the railways. On the other hand, the electrical distribution grid is still in the intermediate stage between the two ends, so the railways are supplied directly from the distribution points regardless the original sources of its consumed energy.

2.1.2 Solar energy

Solar energy is derived from the sun's radiation. The sun is a powerful energy source, and this energy source can be harnessed by installing solar panels. Solar panels, also called photovoltaics or solar PV, is a type of solar cell system that uses semiconductor technology to convert energy from sunlight into electricity.

The solar panels are available with the different size, shape, flexible and more power output. Solar energy has several advantages; it is pollution free and causes no greenhouse gases to be emitted after installation along with it reduces the dependence on oil and fossil fuels and the can be used also to charge the batteries for store the energy. On the other hand, it also suffers from some disadvantages;

it has high initial costs for material and installation as well as it needs lots of space as efficiency is low comparing to other renewable energy sources.

New research [2] done by Imperial College and green energy charity 10:10, has found that solar energy could supply ten per cent of the power needed to fuel the UK's DC-powered rail routes. This will be achieved at a cheaper rate than if the network were fuelled by normal electricity supplies as solar would bypass the national grid and avoid subsidiary costs. Moreover, a battery storage system will be included to store the energy and support the rail network during the evening or following the morning rush-hour.

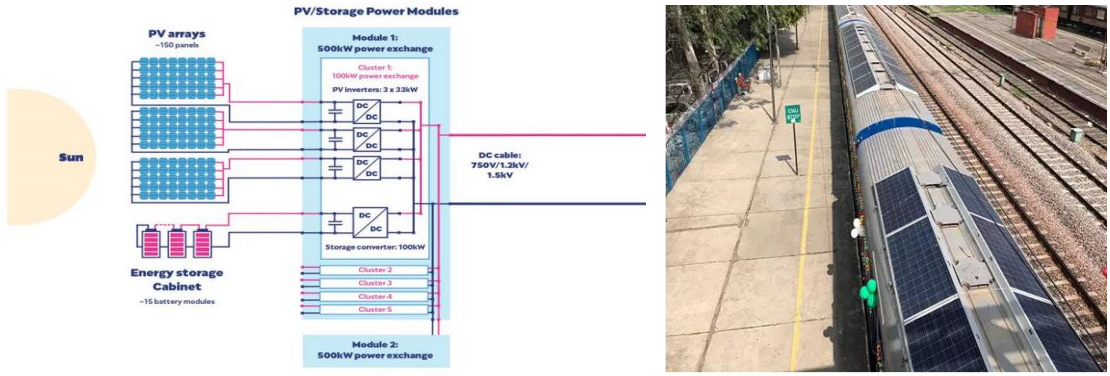

(a) (b)

Figure 3.1 PV panels
(a) Connected to DC rail voltage along with the storage batteries [2] (b) Installed on Roof-top of Train [3]

Another partnership [4] between Imperial College London and 10:10, is working to explore the possibility of installing solar panels along side railway lines and using them to power electric trains directly. Rather than feeding electricity from the panels back into the grid to be redistributed to the railway system, the idea of connecting trains directly to the solar panels would be far more efficient. Accordingly, the solar power is implemented in a microgrid architecture which provide electricity directly to the areas near where it is generated. Microgrids are especially important to rural areas and places where no grid infrastructure currently exists.

However, in terms of vision, the UK may already be falling behind. India has the most ambitious target for implementing a solar-powered network, in which Indian Railways is planning a massive surge of renewable energy deployment for its enormous network, aiming to meet 25% of its power demand with renewables, primarily solar, by 2025 [5].

Figure 3.2 PV the installation of rooftop panels [5]

Indian Railways is collaborating with numerous contractors to meet its solar power objectives. At the end of September, Indian renewable energy developer Azure Power won a contract to deliver

20MW to the country's railways through solar rooftop installations. The technology is expected to supply energy to railway facilities across 17 states and union territories for up to 25 years.

Another examples of existing installations of a roof-top photovoltaic system is a 390 kW system at Tokyo station in 2011, a 78 kW photovoltaic system with 240 kWh lithium-ion batteries at Hiraizumi station in 2012 both by East Japan Railways [6], and a 522.12 kW of solar power generation capacity in Korea, including a 90.4 kW rooftop photovoltaic system at Korail headquarters building [7].

2.2 Energy storage

A good review of energy storage has been presented in Deliverable 2.1 Section 5, which illustrates the requirements, comparison, management and energy losses of energy storage systems. This section only summaries some main information of energy storage.

There are a number of different storage technologies available on the market. Electrical energy cannot be stored directly and thus it must be transformed into another type of energy. Storage technologies could be classified in different manners, e.g. depending on storage form (Figure 2-1) or suitability to the specific power/energy window (Figure 2-2). Storage technologies differ in respect to many aspects like the capital expenditures, power and energy, round-trip efficiency, ambient operational conditions, safety, calendar and cycle lifetime, maturity level, depth of discharge, OPEX cost, electrical performance, etc. Table 2-1 summaries the technical details of these characteristics for the different energy storage technologies.

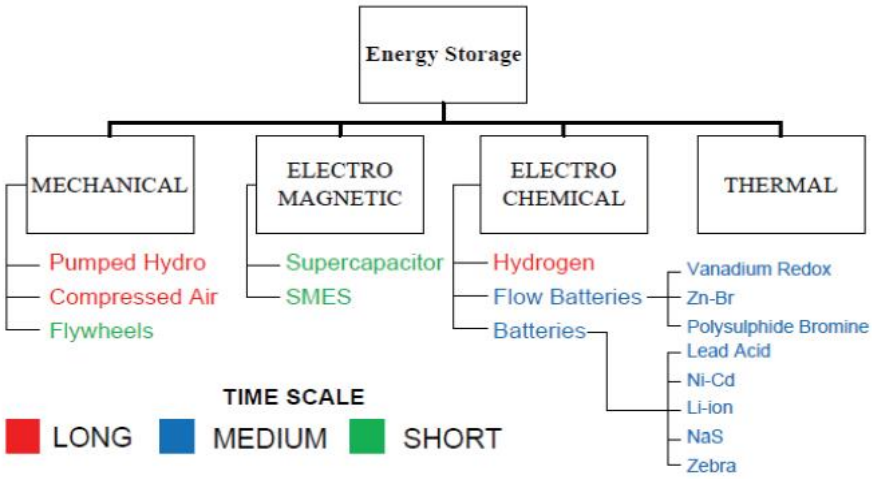

Figure 2-1. Technology dependent classification of energy storage technologies

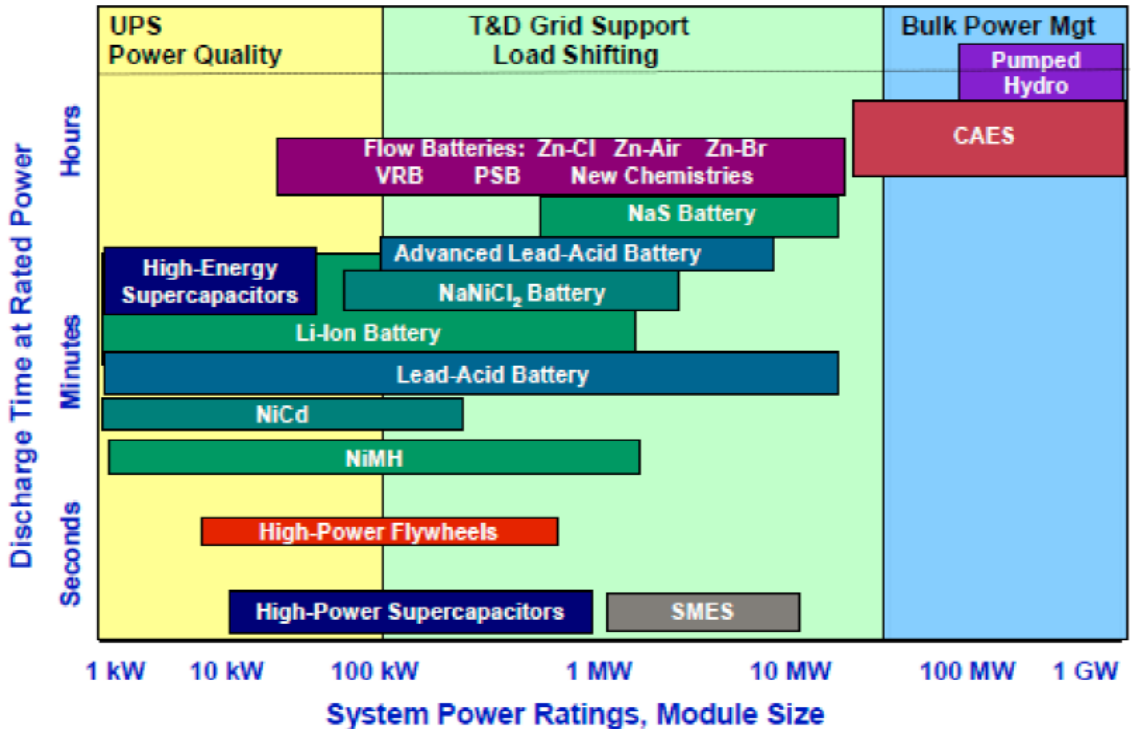

Figure 2-2. Application dependent classification of energy storage technologies (EPRI, Electricity Storage Handbook, 2013).

Table 2-1. Technical characteristics of energy storage technologies [8]

Technology	Energy density Wh/kg(W h/L)	Power density W/kg(W/L)	Power rating	Discharge time	Suitable storage duration	Life time (years)	Cycle life (cycles)	Capital Cost			Round trip efficiency (%)
								$/kW	$/kWh	$/kW h-per cycle	
Flywheel	10–30(20–80)	400–1500(1000–2000)	0–250 kW	ms–15 min	s–min	~15	20,000+	250–350	1000–5000	3–25	85–95
PHES	0.5–1.5(0.5–1.5)		100–5000 MW	1–24 h+	h–months	40–60		600–2000	5–100	0.1–1.4	65–87
CAES	30–60(3–6)		5–300 MW	1–24 h+	h–months	20–60		400–800	2–50	2–4	50–89
GES											
GPM	1.06(1.06)	3.13(3.13)	40–150 MW		h–months	30+		1000			75–80
ARES			100–3000 MW	34 s	h–months	40+		800			75–86
HES											
Fuel cell	800–10,000(500–3000)	500+(500+)	0–50 MW	s–24+h	h–months	5–15	1000	10,000+		6000–20,000	20–35
Gas engine	33,300(530–750)		0–50 MW	s–24+h	h–months						40–50
Super-capacitor	2.5–15	500–5000	0–300 kW	ms–60 min	s–h			100–300	300–2000	2–20	90–95
Batteries											
NaS	150–240(150–250)	150–230	50 kW–8 MW	s–h	s–h	10–15	2500	1000–3000	300–500	8–20	80–90
NaNiCl	100–120(150–180)	150–200(220–300)	0–300 kW	s–h	s–h	10–14	2500+	150–300	100–200	5–10	85–90
VRB	10–30		30 kW–3 MW	s–10 h	h–months	5–10	12,000+	600–1500	150–1000	5–80	85–90
FeCr	10–50	16–33	5–250 kW	s12+h	h–months				250		70–80
ZnBr	30–50(30–60)		50 kW–2 MW	s–10 h	h–months	5–10	2000+	700–2500	150–1000	5–80	70–80
Zn-air	150–3000(500–10,000)	100	0–10 kW	s–24h+	h–months			100–250	10–60		50–55
Li-ion	75–200(200–500)	500–2000	0–100 kW	min–h	min–days			1200–4000	600–2500	15–100	85–90
SMES	0.5–5(0.2–2.5)	500–2000(1000–4000)	100 kW–10 MW	m–8 s	min–h	20+	100,000+	200–300	1000–10,000		95–98
LAES	97		350 kW–5 MW	1–24 h+	h–months	20+		1000–2000			50–70

The rating capacities of the batteries used in some railway line are shown in Table 2-2 [9].

Table 2-2 Specific capacity of the permanent and temporary batteries for saving energy

Company	Batteries	Power rating, kW	Energy rating, kWh
Kobe Municipal Transportation Bureau	lithium-ion battery (PB)	1000	37.4
West Japan Railway Company	lithium-ion battery (PB)	1050	140
Kagoshima City Transport Bureau	lithium-ion battery (PB)	250	18.1
Nagoya Railroad Co., Ltd.	lithium-ion battery (TB)	500	18.7
Osaka Municipal Transportation Bureau	Ni-MH battery (TB)	5600	576

3 Connection to AC railways

This section compares the technical and economic benefits of several configurations with power electronics converters for the integration of photovoltaic sources or energy storage into the AC railway power supply systems.

3.1 Schematics

In general, the design choices for the power supply configurations should be aimed at mitigating the following disadvantages and limitations of ac railways [10];

- High voltage drops due to the requirement of single-end feeding; single-end feeding is necessary to avoid that the overhead line constitutes a parallel path for the public grid;
- Static imbalance, being trains single-phase loads connected to a three-phase grid;

The first disadvantage can be mitigated by special traction schemes using either booster transformers or auto-transformers that enable feeding sections of length up to 20-30 km. However, the sectioned overhead line strongly reduces the chances of using the braking energy inside the railway. The second disadvantage is normally addressed by either a special design of traction transformers, like Scott of Leblanc types, or a special connection, i.e. each feeding section is connected to a different pair of phases of the public grid. Both methods achieve adequate balancing only if the power absorbed by trains is the same for all the feeding sections。

The easiest and most obvious solution for integrating PV sources is to connect them to the high-voltage busbars of the transformers of railway feeder stations with no modifications on the railway side. This configuration is assumed as the baseline for the comparison of other four power configurations with power converters to exploit the potential of PV sources while addressing the shortcomings of ac railways, as shown in Figure 3-1.

These configurations, shown in Figure 3-1, are selected to be functionally equivalent and present the following common characteristics:

- a 25 kV, 50 Hz single-phase ac railway overhead line supplied by feeder stations connected to a high-voltage public grid at 132 kV;
- the railway is not allowed to introduce phase imbalance on the transmission grid; this is guaranteed either by three-phase power converters in the feeder stations or by extra phase balancers;
- a PV source is located in the proximity of each railway feeder station.

Figure 3-1a shows the baseline configuration *"a"*, which assumes that the single-phase transformer, the PV source, and the phase balancer are all connected in parallel to the high-voltage bus bars. The phase balancer is rated for few kV and consists of a three-phase converter and a three-phase transformer in accordance with the limits of semiconductor devices currently available on the market and the typical 3-level converter topology for high-power applications. In general, one phase balancer could suffice for three adjacent feeder stations and, thus, a phase balancer with one third of the power rating is assumed in each feeder station. The PV generator operates at lower voltage (around 1 kV) and is connected to the grid with a three-phase inverter and transformer.

The configuration *"b"* (in Figure 3-1b) is derived from the configuration *a* by merging together the converters and the transformers of the phase balancer and the PV source. Thus, the PV generator is connected to the dc circuit of the phase balancer with a dc-dc boost converter to adapt the voltage and enable the maximum power point tracking control.

In the third configuration, *"c"* (Figure 3-1c), the PV generator is connected to the overhead line via a single-phase inverter operating at low voltage and a single-phase transformer to step up the voltage to 25 kV. The phase balancer is independently connected to the grid via a three-phase transformer as in Figure 3-1a.

In the remaining two configurations, the railway power supply, the PV generator, and the phase balancer are merged together with a multiple-input static converter. The most important difference from the previous configurations is that the sectioning of the railway overhead line is no longer needed and the railway can be supplied simultaneously from several feeder stations. In the configuration *"d"* (Figure 3-1d) the ac-dc input stage of the converter is a bidirectional three-phase active rectifier, while in the configuration *"e"* (Figure 3-1e) it is a unidirectional diode rectifier. As a direct implication of the diode rectifier in the fifth configuration, there is no need of a special control to avoid recirculation of power between the three-phase grid and the railway. However, this scheme requires an extra energy buffer to absorb the excess energy generated by the PV and train braking if there is insufficient demand on the railway line. Thus, the configuration includes an additional storage unit connected to the dc-bus via a second bi-directional boost dc-dc converter. The energy storage could be added also to the configuration *d*, which would also be equivalent of replacing the diode rectifier with a bi-directional converter as in configuration *e*. However, this additional topology would increase the cost with only a marginal benefit for the entire system, as the electricity surplus from the PV could be directly transferred to the grid, making the energy storage redundant.

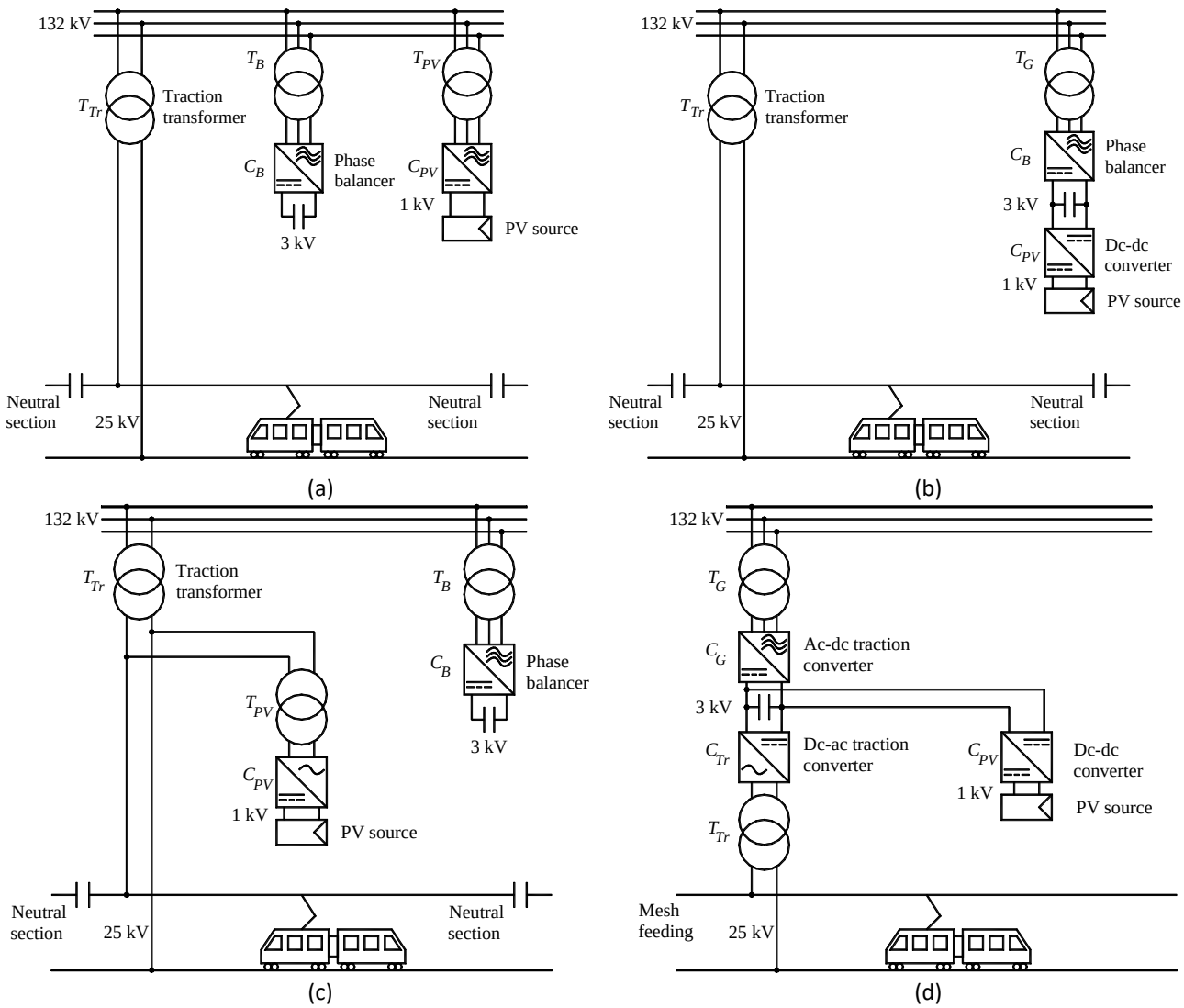

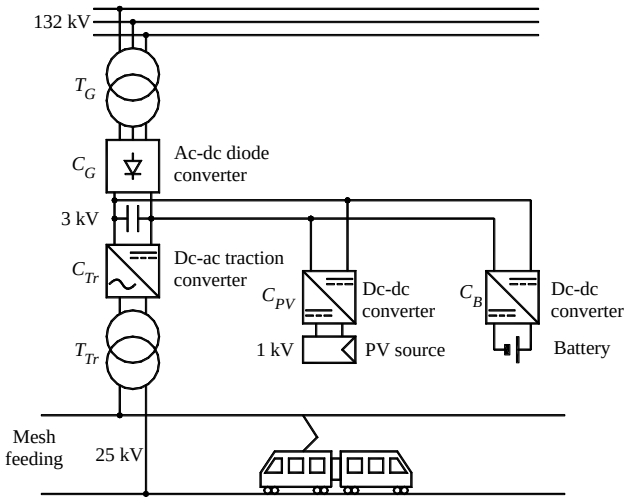

(e)

Figure 3-1 Possible connection schemes for integration of PV to railway feeder stations [10]

3.2 Preliminary Design

The common design of all configurations:

- The rated power of a converter is determined on the basis on the maximum instantaneous power, as converters have a limited overloading capability.
- Transformers allow instead temporary overloading, with a typical thermal time constant of about 60 minutes and a peak power of about 300% of the nominal power for a few seconds. Therefore, the rated power of a transformer has been calculated as the maximum between the highest average power over any time interval of 60 minutes and a third of the peak power.

3.3 Influences

There many different sources of losses in the proposed integrated systems. The main losses could be divided into conversion losses and system consumption losses.

With the numerical analysis, the installation costs and the costs associated to energy losses per km of line for the five configurations are displayed in Figure 3-2. It is worth noting that when the total line length increases, the cost functions present a discontinuity when an extra feeder station is necessary to keep the maximum voltage drop within the given limit. The effect of the discontinuity is smoothed out for longer lines, because the total cost of the electrification increases with the line length, while the cost of one extra station remains the same. For a PV source of 2 MW, the railway power demand is always higher than the PV power. In particular, the power losses of configurations d and e are equal, since the same power is supplied by the same number of converters and the efficiency coefficients are all equal (corresponding to 98% efficiency at rated power).

With reference to capital cost, configuration d is significantly more expensive than the others because of the high cost of the bidirectional ac/dc converter CG that has to supply the entire traction power. When instead the power of PV is substantial (15 or 30 MW), the cost of the PV converter increases for all the configurations and, hence, the cost of CG for configuration d is comparable with the others. The capital cost of configuration e is significantly higher than the others for the large capacity of the battery.

With reference to the energy costs, configurations d and e are the most expensive, because of the power losses of converters C_G and C_{tr}, which are less efficient than transformers. The two costs are nearly the same when PV are 2 MW, because the train power is always higher than the PV power and

the energy stored by the battery is very small. For higher PV powers, the power losses of these configurations do not increase significantly, as the PV source is integrated in the railway power supply and there is no need for phase balancers. For the other configurations, instead, the powers of the PV converters and the phase balancers increase and so do the power losses.

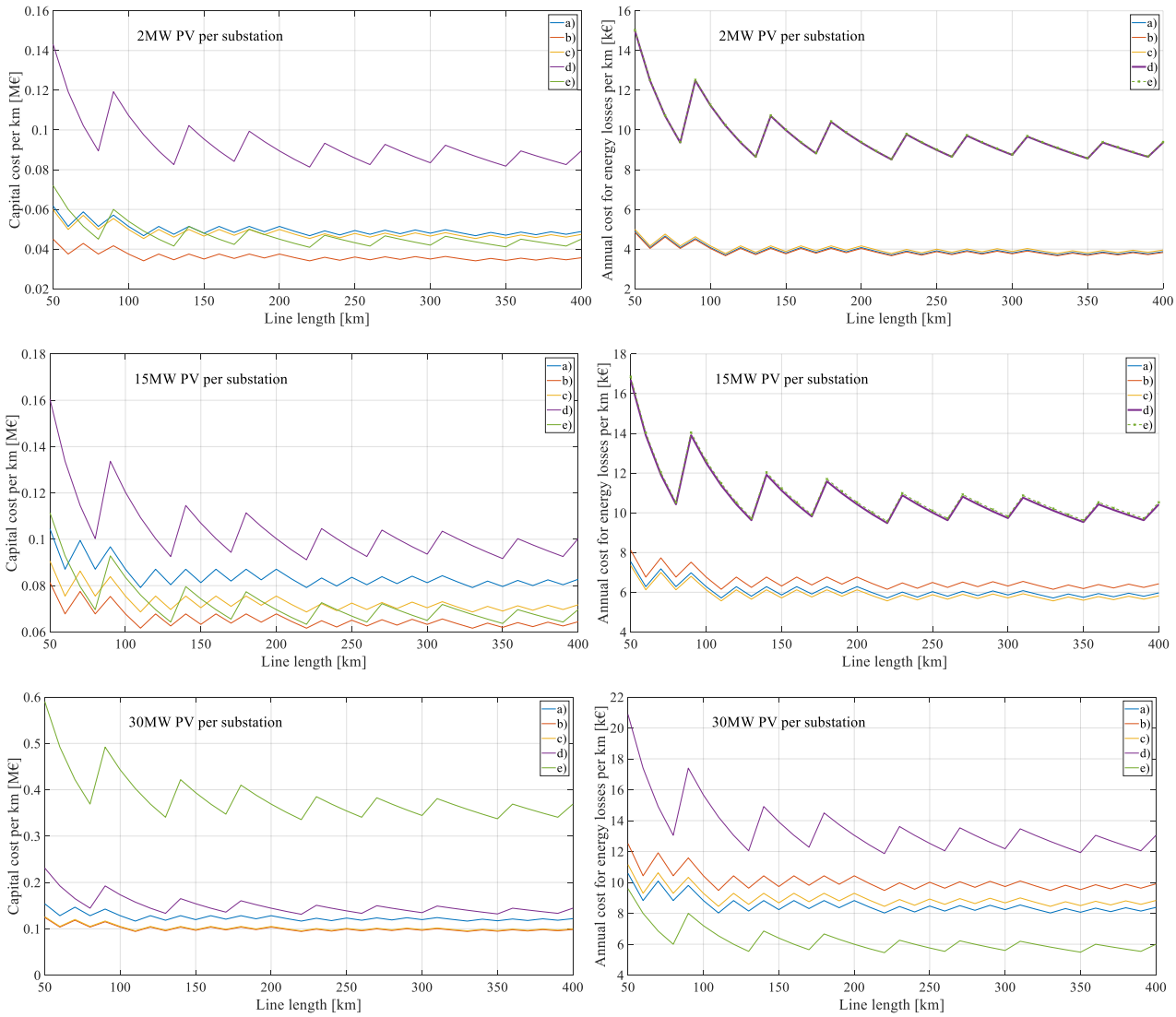

Figure 3-2 Capital cost and annual energy losses cost per line km and for different installed PV powers

4 Connection to DC railways

This section introduces the some possible connection schemes of storage and LCTs integration with DC railways and reviews the potential benefits.

4.1 Schematics

A typical scheme for the electrification of DC railways is shown in Figure 4-1, which has been illustrated in Deliverable 2.1 Section 4. Most energy storage and renewable energy sources operates with DC power for many electric technologies, e.g. electrochemical and flow batteries, electrochemical double-layer capacitors (supercapacitors), superconducting magnetic energy storage (SMES), fuel cells fed by hydrogen tanks, wind turbines and photovoltaic sources.

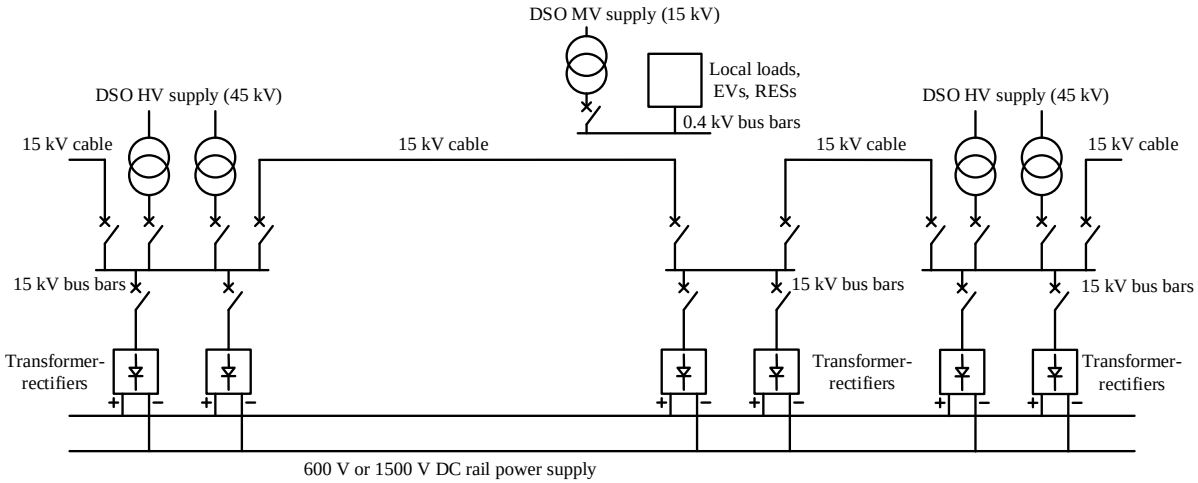

Figure 4-1. Typical electrification scheme for DC railways

4.1.1 Configuration 1: Just energy storage

The simplest configuration is shown in Figure 4-2. A bidirectional DC/DC converter is used to connect the DC rail power supply to the energy storage.

For this configuration, the energy storage can support the rail power network and increase the network voltage. In addition, the railway traction network can recharge the energy storage when there is few trains or when a train is braking, and reduce network overvoltage.

The factors in energy saving by this configuration include the capacity, location and control strategies of energy storage. The network parameters and train volume and timetable should be considered in designing the energy storages. Brake voltage following control of energy storage systems is introduced in [11], which realizes 13.5 to 21.7% energy saving than fixed threshold voltage control.

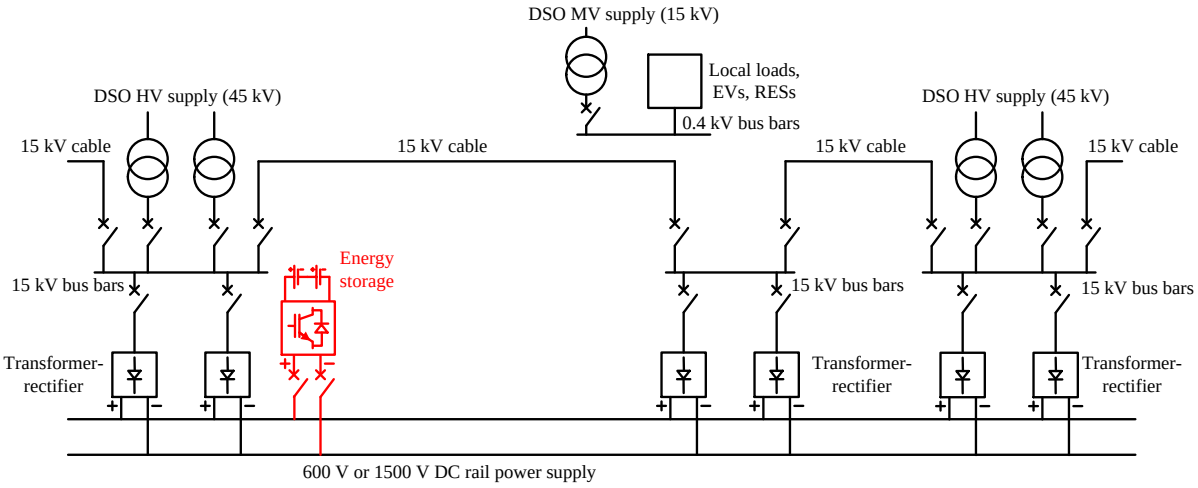

Figure 4-2 Configuration 1

4.1.2 Configuration 2-4: Energy storage and renewable energy sources

In the configuration 2, the ESS and RES are connected to the railway traction power network in parallel. Two bidirectional DC/DC convertors are used. This configuration covers the benefits of configuration 1. In addition, the REV supports the railway and charges the ESS, reducing the power of the HV feeders. One possible problem is the RES supports the railway when the trains are braking, which may cause network overvoltage. Therefore, the size of ESS in configuration 2 should be bigger than it in configuration 1.

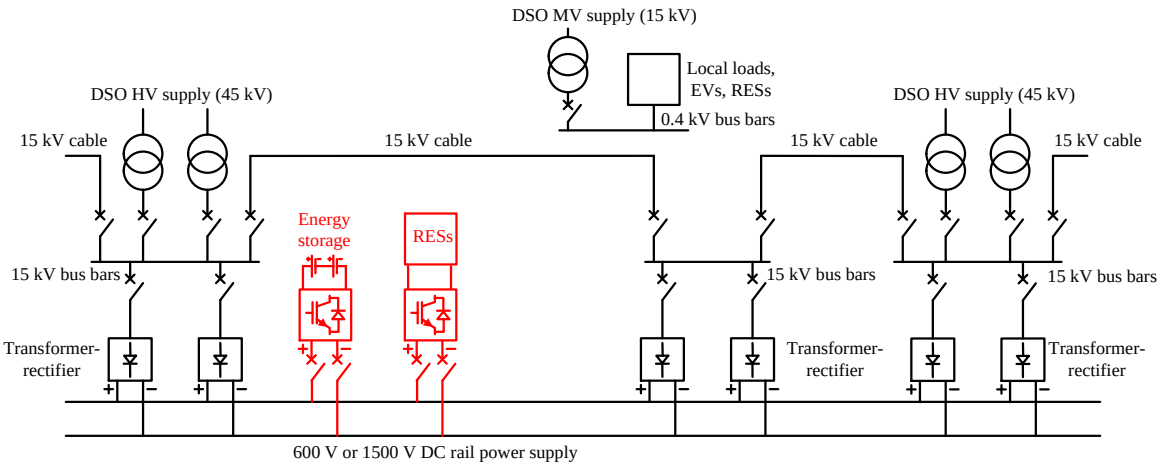

Figure 4-3 Configuration 2

In the configuration 3, the ESS and RES are connected in series to the railway traction power network. There are several working modes for this configuration:

- The RES can charge the ESS and support the railway at the same time.
- The RES and ESS support the railway together.
- The ESS is charged by the RES and railway.

Compared with configuration 1, the ESS is used more frequently, and cannot be switched off. Therefore, the capacity of the energy storage should be considered.

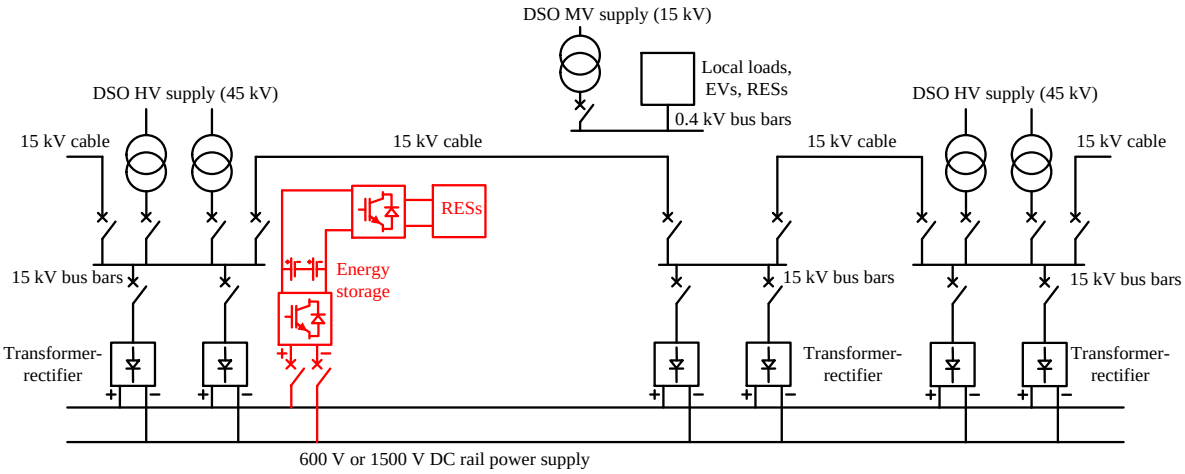

Figure 4-4 Configuration 3

In the configuration 4, an additional bidirectional converter is used to connect to the ESS. The ESS can be better controlled compared with configuration 3, but higher power losses will be caused due to the additional converter.

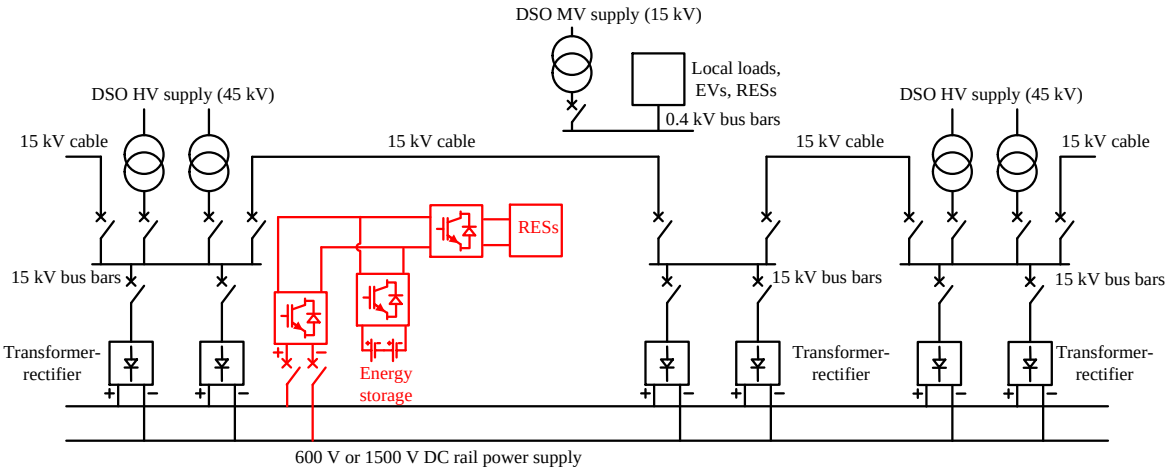

Figure 4-5 Configuration 4

Some other possible configurations are introduced in Deliverable 2.1 Section 6, which can be used to maximize rail regeneration, balance the HV DSO grid and balance the HV DSO grid and the railway, respectively.

4.2 Preliminary Design

Metro de Madrid Line 2 is a 14.031 km route with 20 passenger stations and 5 1500V DC traction substations. An initial study of substation power output has been carried out. Figure 4-6 shows the power of each substation during a time interval equal to the headway (120 s), this is because these diagrams are periodic of the headway time at steady-state. It can be found the peak power of substation 4 is higher than the others. The peak power is 9.4 MW.

Figure 4-7 shows the instantaneous power of each TPSS, when TPSS 4 is reversible for the presence of the sSOP which allows regenerative braking energy flowing back to the AC network. The peak inverting power of TPSS 4 is around -5 MW. Some analysis is conducted based on the power consumption of TPSS 4 shown in the following sections.

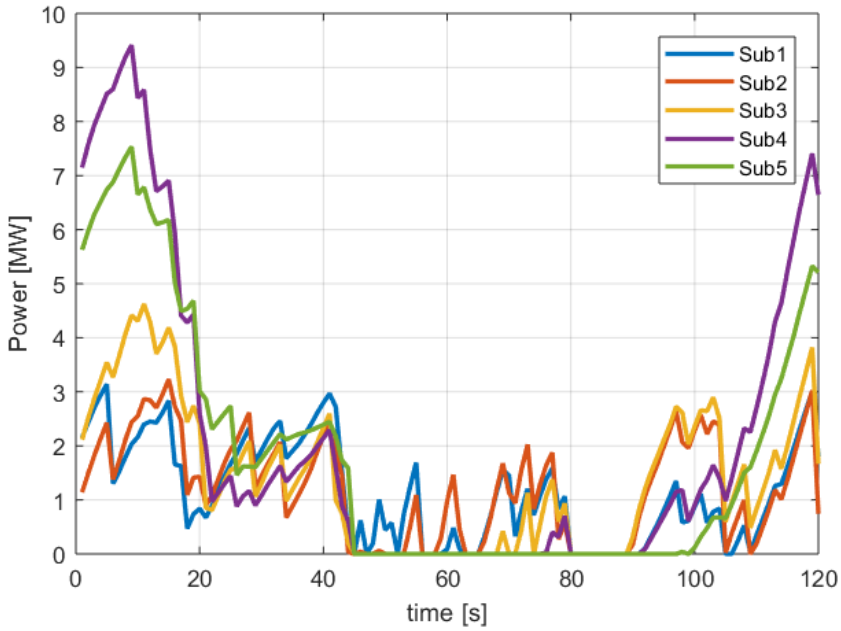

Figure 4-6 Power of each traction substation

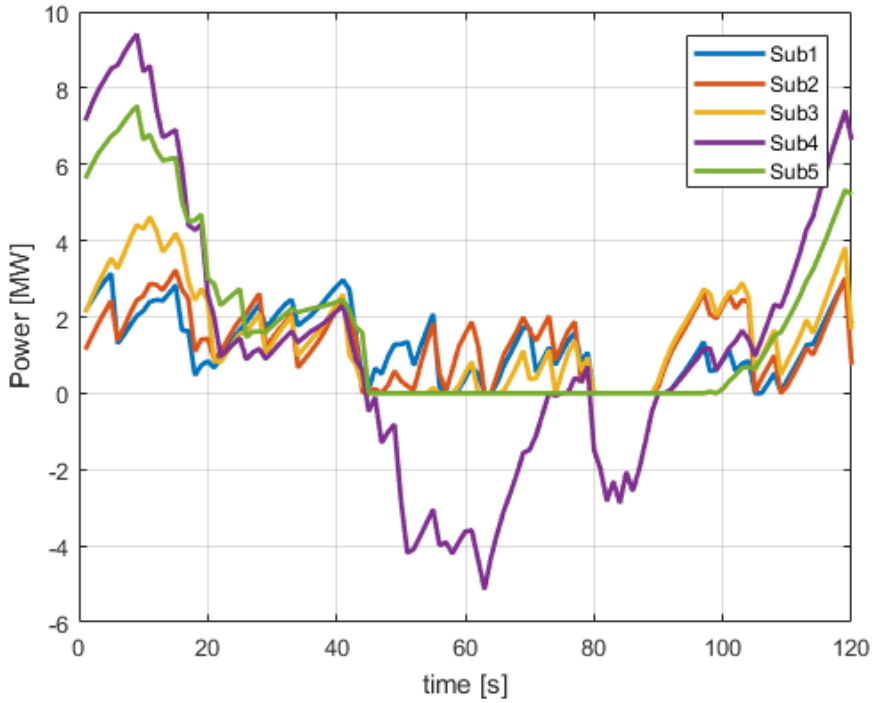

Figure 4-7 Power of TPSS when sSOP is at TPSS 4

4.2.1 Using PV sources

If all of the TPSS 4 traction energy is supplied by PV sources, the power capacity of PV sources should be 9.41MW. If we assume 1 m^2 of PV can produce 100 W continuously, we will need 94,100 m^2 of PV panel.

If the PV sources are used to supply the average level of the traction power which is 2.1 MW, 21000 m^2 of PV panel will be required. In this way, additional power supplies should be used with PV sources. For example, the PV sources connects with distribution network or ESSs.

Therefore, using PV alone to support railway traction systems is very difficult. The combination of PV and DSP or PV and ESS could be reliable.

4.2.2 Using ESSs

In this case, ESSs and DSO are connected together to supply the railway traction systems without regenerative braking energy. The ESS is used to maintain DSO power at the average power of TPSS 4 requirement (2.1MW). Figure 4-8 shows the power requirement of TPSS 4 and the power output from DSO and ESS. For the power of ESS, the discharging power is positive and charging power is negative. The power capacity requirement of the ESSs is 7.3 MW. Figure 4-9 shows the energy state of the ESSs. The energy capacity requirement is 37 kWh.

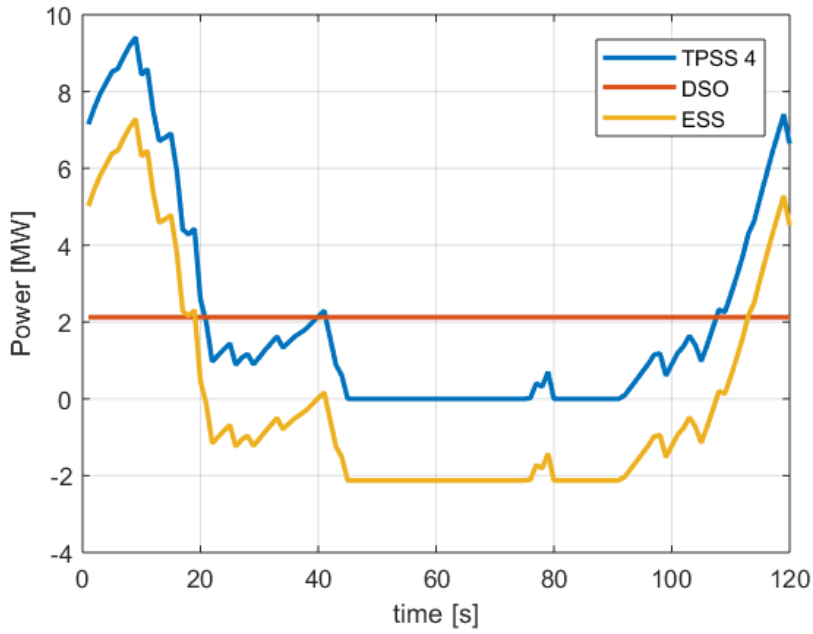

Figure 4-8 Power of TPSS 4, DSO and ESS

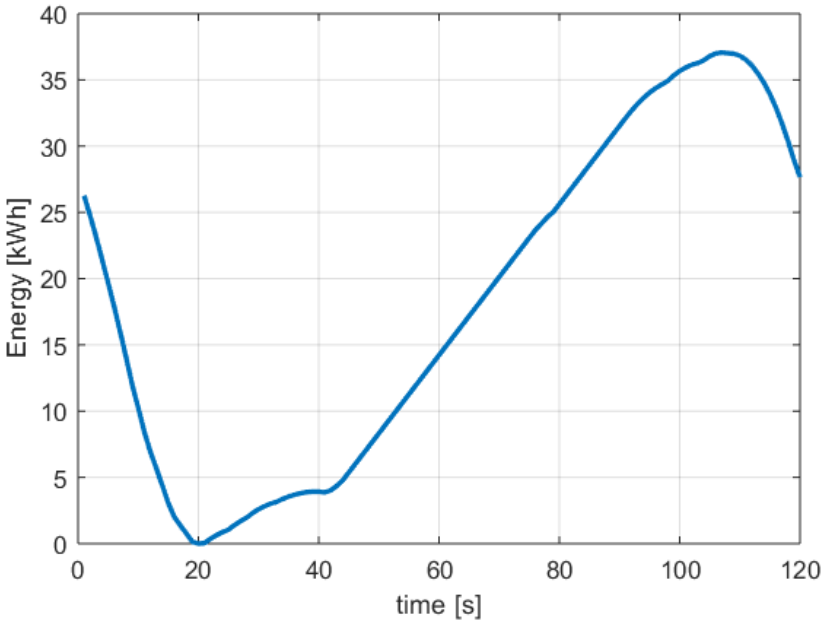

Figure 4-9 Energy state of ESS

In this case, the regenerative braking energy is considered. As shown in Figure 4-10, the power of DSO is reduced to 1.31 MW. However, the maximum power of ESSs increases to 8.11 MW. The energy state of the ESSs is shown in Figure 4-11, which denotes the maximum energy of ESSs is 45.7 kWh.

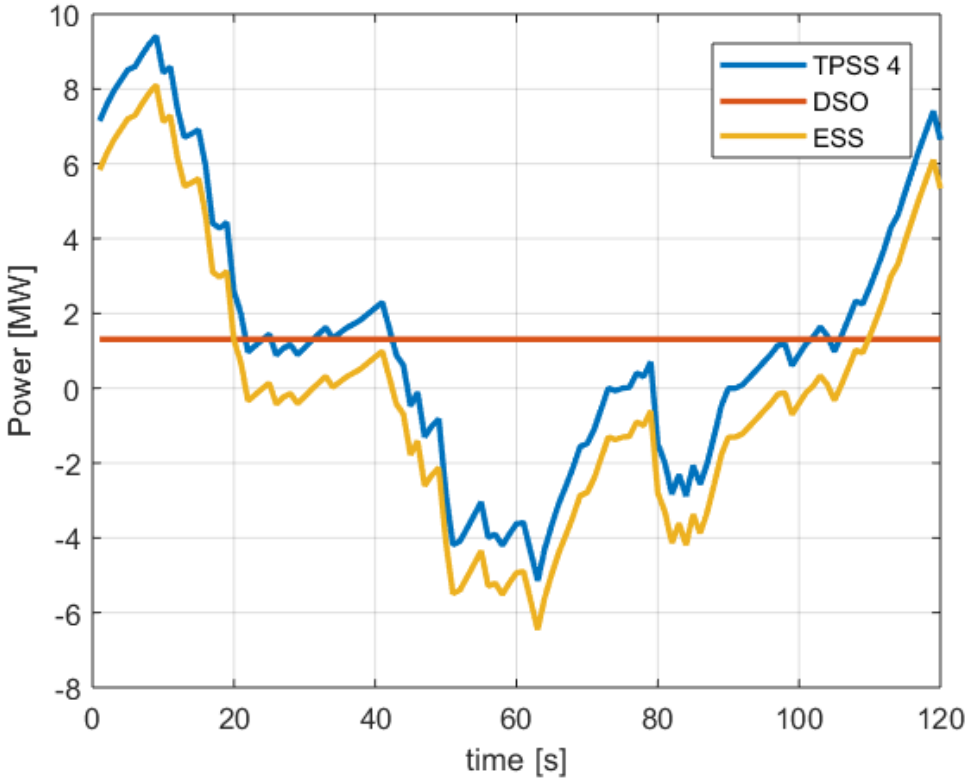

Figure 4-10 Power of TPSS 4, DSO and ESS

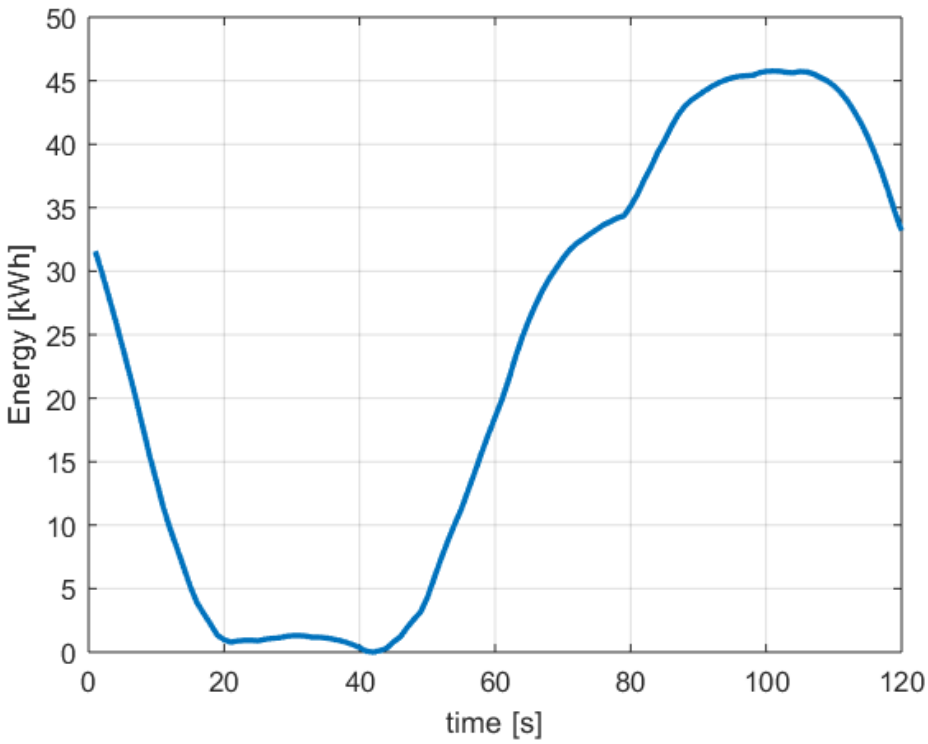

Figure 4-11 Energy state of ESS

Beijing Subway Batong Line employed a supercapacitor cabinet for collecting regenerative braking energy [11]. The supercapacitor cabinet is equipped with the 48V/165F SC modules produced by Maxwell. The maximum energy capacity is 7.4 kWh, and the power is 1.34 MW under the rated voltage of 672 V. To realize the requirements in Figure 4-10 and Figure 4-11, we will need around 8 times of SC modules in Beijing Subway Batong Line. If we can increase the power from DSO, the requirement of ESS capacity can be reduced. It is worth studying the trade of DSO power reduction and ESS capacity for the best system performance.

5 Conclusions

This report first reviews the technologies of wind and solar energy and their applications in rail sector. Nowadays, there are few cases using wind power to support railways directly. However, some studies presented the idea to connect solar panels to trains directly, rather than feeding the railways by the electricity from the panels back into the grid. This method is more efficient, but energy storage devices are needed to store the energy and support the rail network during the evening.

This report also proposes and analyses the possible feeding schemes which connect LCTs or energy storage to AC and DC railways. It has been shown that the power of the PV sources is a determinant factor in the choice of the most economic configuration. It is essential to understand whether the photovoltaic source is mainly supporting the railway or the public grid. In the case study, it is recommended keeping the photovoltaic generation separate from the railway and using the phase balancer to minimise the imbalance caused by the railway. The study of DC railway recommends that only using PV to support the railway traction is impossible. However, energy storage can be used to reduce the peak power and recover regenerative braking energy.

6 References

[1] *Electric Dutch trains on wind power*. Available: https://www.wired.co.uk/article/dutch-trains-wind-power

[2] *Some of the UK's trains could be running on solar power by 2020*. Available: https://www.wired.co.uk/article/in-the-future-trains-will-be-solar-powered

[3] *Solar Train Power on Wheels*. Available: https://innovate.mygov.in/wp-content/uploads/2018/09/mygov1535902505419392.pdf

[4] *UK Studies Possibility Of Track-Side Solar Panels To Power Electric Trains*. Available: https://cleantechnica.com/2017/01/12/uk-studies-possibility-track-side-solar-panels-power-electric-trains/

[5] *Indian Railways: blazing a trail towards renewable energy*. Available: https://www.railway-technology.com/features/indian-railways-blazing-trail-towards-renewable-energy/

[6] H. Hayashiya, T. Suzuki, K. Kawahara, and T. Yamanoi, "Comparative study of investment and efficiency to reduce energy consumption in traction power supply: A present situation of regenerative energy utilization by energy storage system," in *2014 16th International Power Electronics and Motion Control Conference and Exposition*, 2014, pp. 685-690.

[7] B. Yoo, C. Park, and J. Lee, "A study on design of photovoltaic system using electrical railway stations," in *2016 19th International Conference on Electrical Machines and Systems (ICEMS)*, 2016, pp. 1-5.

[8] M. Aneke and M. Wang, "Energy storage technologies and real life applications – A state of the art review," *Applied Energy,* vol. 179, pp. 350-377, 2016/10/01/ 2016.

[9] T. Ratniyomchai, S. Hillmansen, and P. Tricoli, "Recent developments and applications of energy storage devices in electrified railways," *Electrical Systems in Transportation, IET,* vol. 4, no. 1, pp. 9-20, 2014.

[10] S. D'Arco, L. Piegari, and P. Tricoli, "Comparative Analysis of Topologies to Integrate Photovoltaic Sources in the Feeder Stations of ac Railways," *IEEE Transactions on Transportation Electrification,* pp. 1-1, 2018.

[11] Z. Yang, Z. Yang, H. Xia, and F. Lin, "Brake Voltage Following Control of Supercapacitor-Based Energy Storage Systems in Metro Considering Train Operation State," *IEEE Transactions on Industrial Electronics,* vol. 65, no. 8, pp. 6751-6761, 2018.